Technische Daten/ Technical Data

KLUDI SOUNA
single lever basin mixer for washbowls
DN 15

Ref.: 46298N575

Finishes:
N5 Stainless Brushed Nickel PVD

Product description
Manufacturer KLUDI GmbH & Co. KG
Typ: KLUDI SOUNA
single lever basin mixer for washbowls
Ref.: 46298N575

washbowl mixer
single lever mixer
1-hole mounted
solid lever, metal
aerator, S-Pointer M18,5 PCA
ceramic cartridge with hot water safety device
flow rate at 3 bar 4,5 l/min.
flexible hoses G3/8 DVGW approved
shank-fixing
EU taxonomy: max. 6 l/min. -
Substantial Contribution (SC) possible

Produktabbildung/ Product picture

Maßzeichnung/ Dimensional drawing

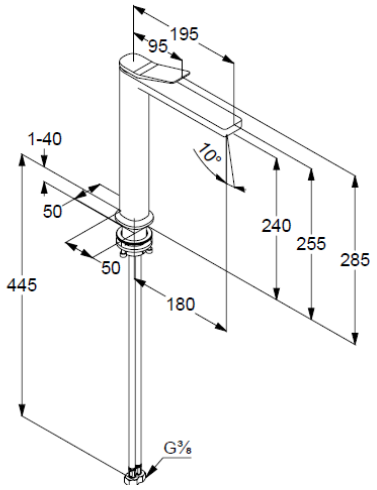
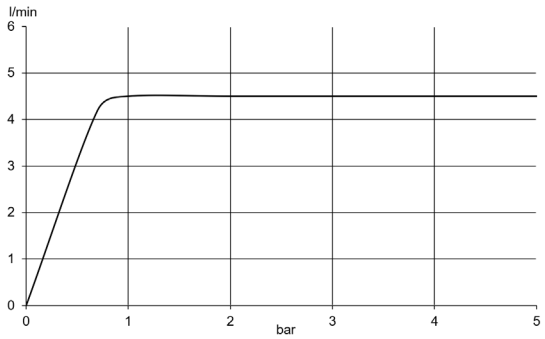
Durchfluss/ Flow rate