Technische Daten/ Technical Data

KLUDI DECUS, ECOPLUS
single lever basin mixer 110
DN 15

Ref.: 54289N175

Finishes:
N1 Brushed Bronze PVD

Product description
Manufacturer KLUDI GmbH & Co. KG
Typ: KLUDI DECUS, ECOPLUS
single lever basin mixer 110
Ref.: 54289N175

basin mixer
single lever mixer
1-hole mounted
solid lever, metal
aerator M18,5 PCA
ceramic cartridge with hot water safety device
middle position cold water
flow rate at 3 bar 4,5 l/min.
flexible hoses G⅜ DVGW approved
rapid installation set
push open waste G1¼

Produktabbildung/ Product picture

Maßzeichnung/ Dimensional drawing

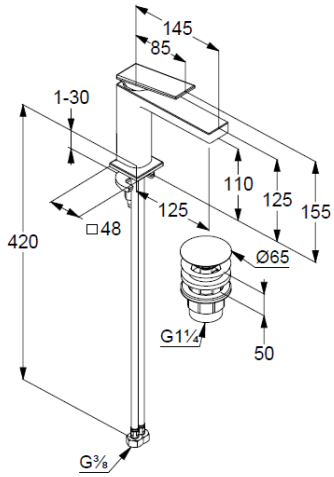
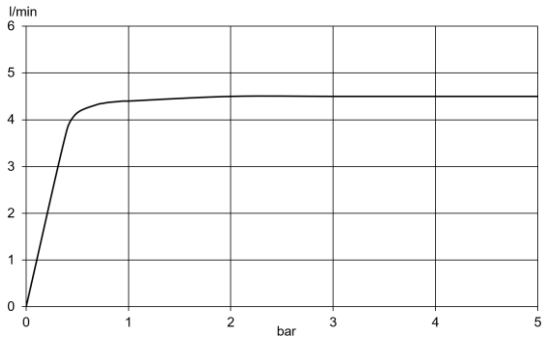
Durchfluss/ Flow rate