Technische Daten/ Technical Data

KLUDI BOZZ
single lever basin mixer
DN 15

Ref.: 380270576

Finishes:
05 chrome

Product description
Typ: KLUDI BOZZ
single lever basin mixer
Ref.: 380270576

basin mixer
single lever mixer
1-hole mounted
solid lever, metal
swivel spout (360°)
lateral actuation
aerator M21,5 PCA
ceramic cartridge with hot water safety device
flow rate at 3 bar 5 l/min.
flexible hoses G3/8 DVGW approved
shank-fixing
pop up waste set G1 1/4 metal
EU taxonomy: max. 6 l/min. -
Substantial Contribution (SC) possible

Produktabbildung/ Product picture

Maßzeichnung/ Dimensional drawing

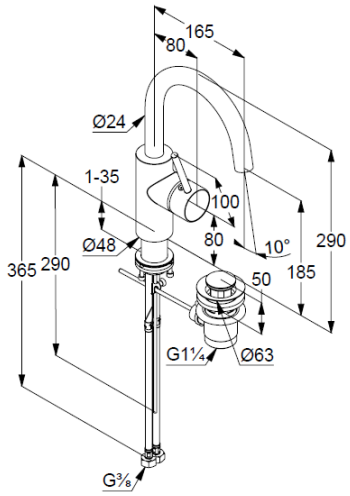

Durchfluss/ Flow rate

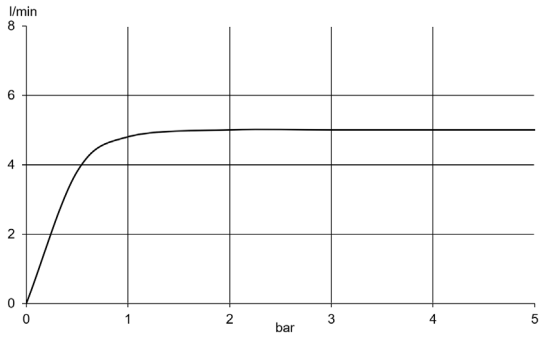

KLUDI