Technische Daten/ Technical Data

KLUDI SOUNA
single lever bath-and shower mixer
DN 15

Ref.: 46691N575

Finishes:
N5 Stainless Brushed Nickel PVD

Product description
Manufacturer KLUDI GmbH & Co. KG
Typ: KLUDI SOUNA
single lever bath-and shower mixer
Ref.: 46691N575

bath-and shower mixer
single lever mixer
wall mounted
diverter as rotary ceramic valve
solid lever, metal
aerator, S-Pointer M24 laminar
protected against back flow
shower outlet G1/2
ceramic cartridge with hot water safety device
flow rate bath at 3 bar 20 l/min.
flow rate shower at 3 bar 18 l/min.
S-unions G1/2 x G3/4

Produktabbildung/ Product picture

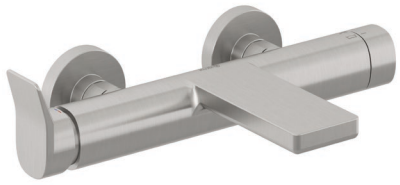

Maßzeichnung/ Dimensional drawing

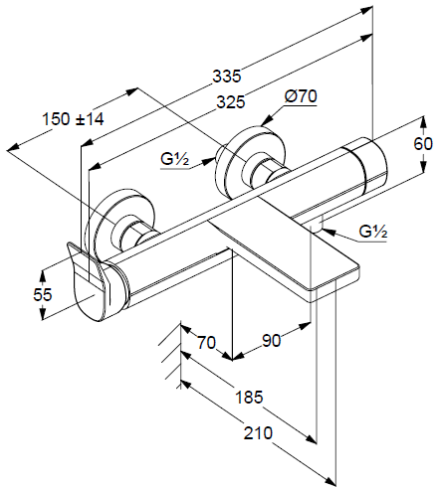

Durchfluss/ Flow rate

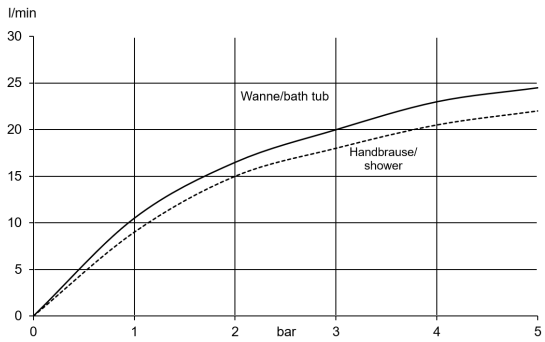

KLUDI