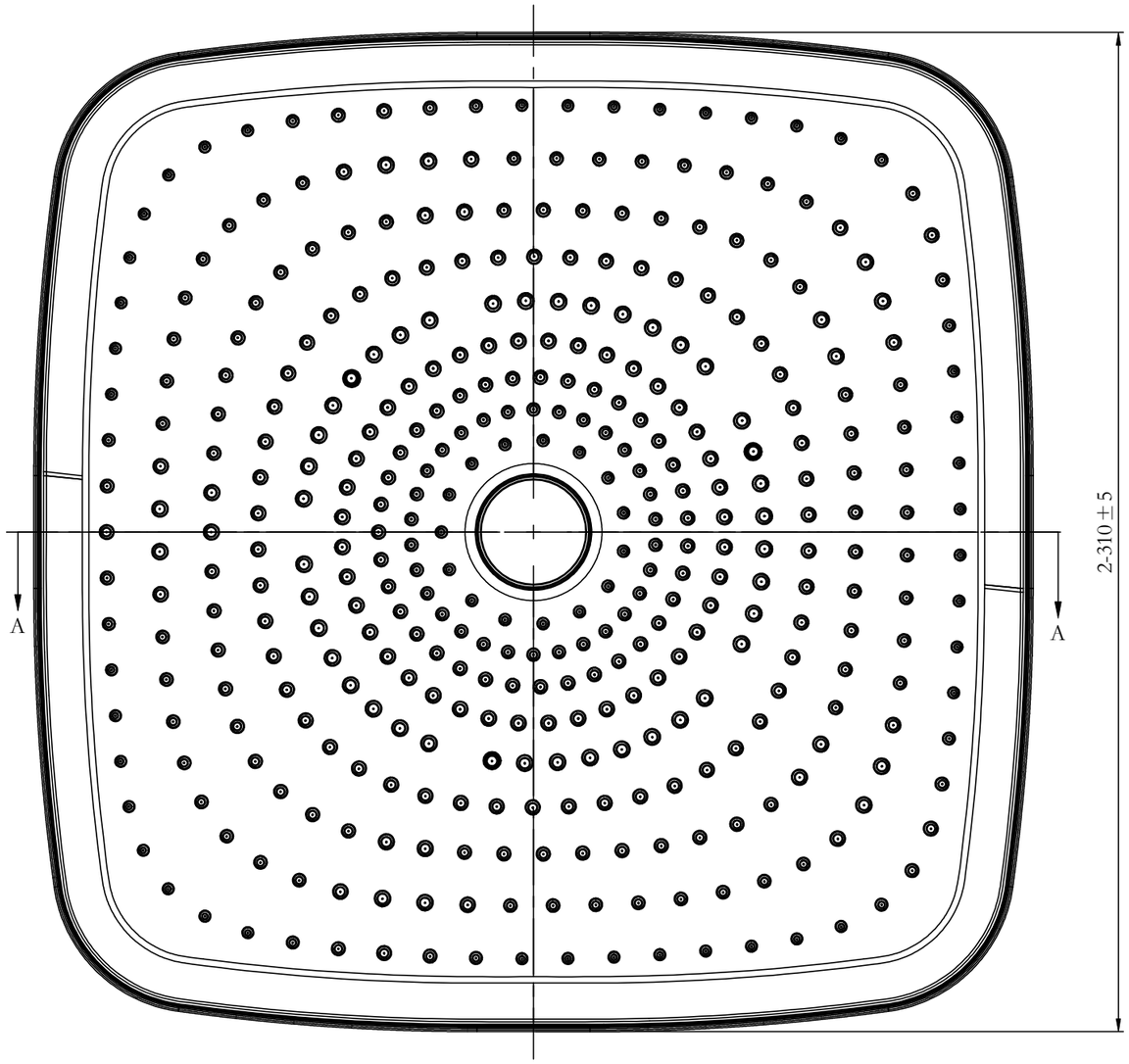

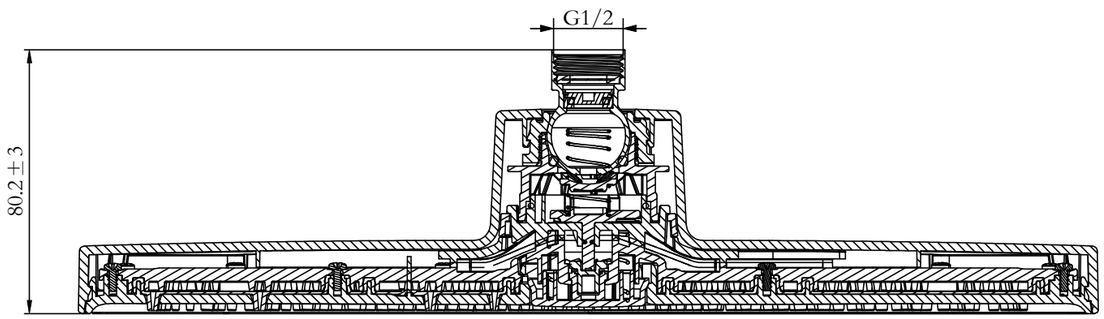

SECTION
A_A

TECHNICAL REQUIREMENTS:
APPEARNCE:
1. MEET EN1112 AND EN248.
2. G1/2-B THREAD MEETS GAUGE.
3. FLOW RATE: WITH 20L FLOW REGULATION, UNDER 0.3MPa
PRESSURE, THE FLOW RATE NEEDS TO BE LESS THAN 20L.
4. MEET THE KTW, ACS, WRAS CERTIFICATION.

					DWG.BY		V32KB3131EU/SM	
					CKD.BY			
					APP.BY		DWG.NO.	111023880004
					DATE		MATERIAL	ABS
			VIEW	UNIT	REV	VIGOUR		
SIGN	DESCRIPTION	ZO.		mm	1			

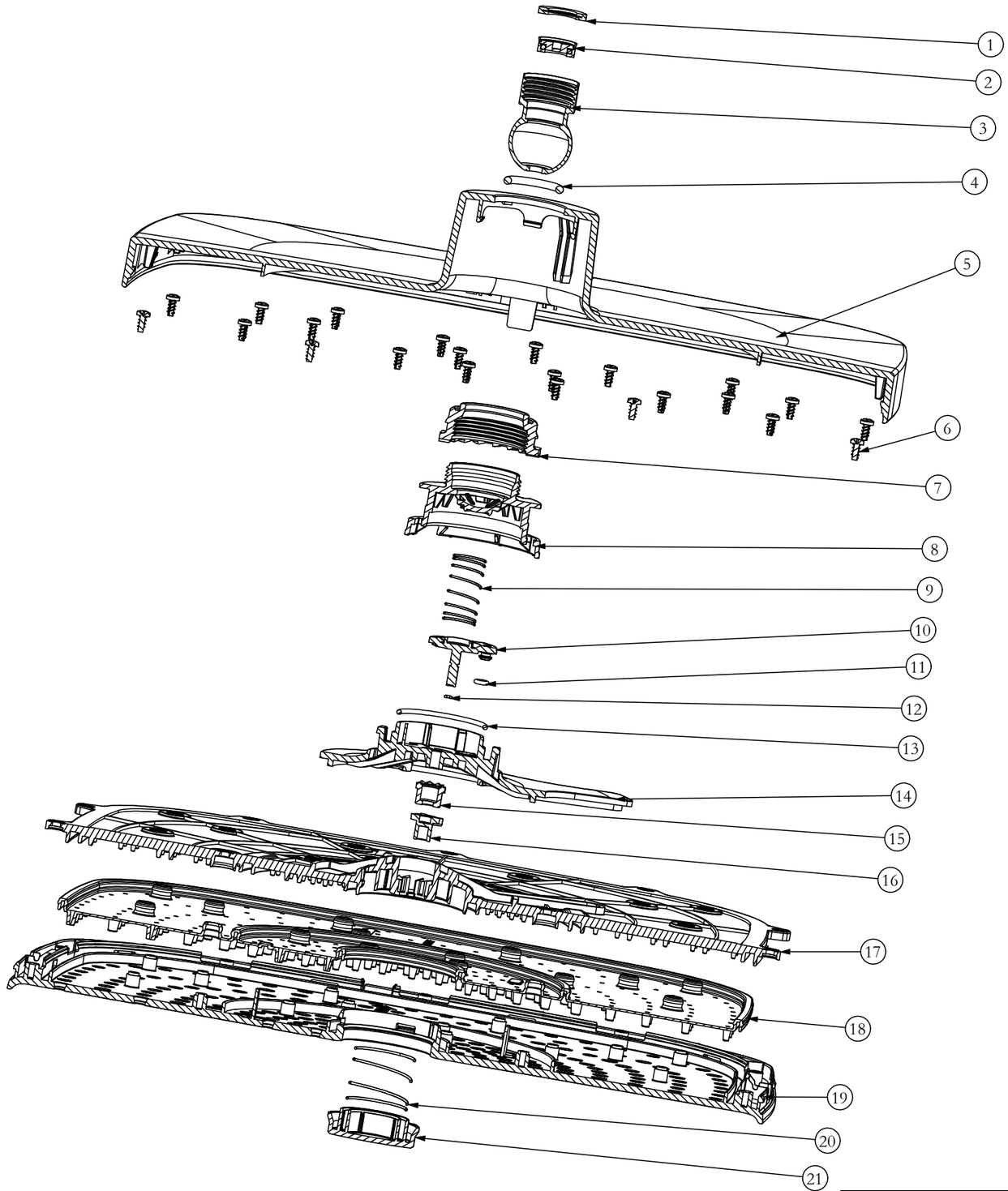

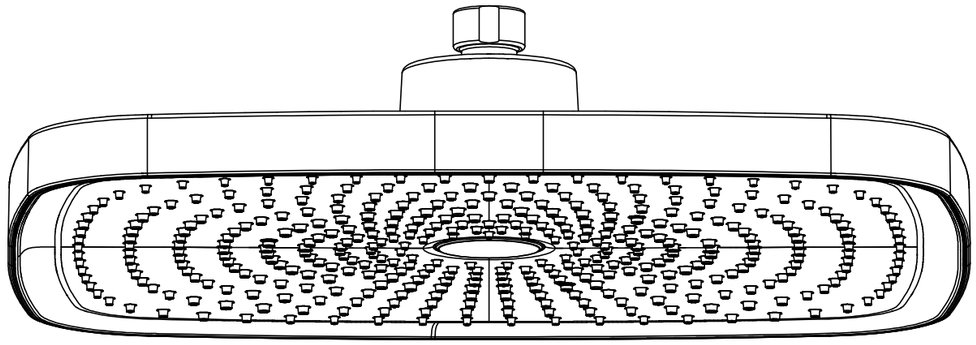

NO.	DWG.NO.	NAME	MATERIAL	QTY
21	111023881008	BUTTON	ABS757	1
20	T24_8X0_9X01	SPRING	SUS304	1
19	111023881026	V3-310 SQUARE DECORATIVE PANELS	ABS757	1
18	111023881028	V3-310 SQUARE OUTLET NET	LSR	1
17	111023881027	V3-310 SQUARE INNER BODY	POM_WK2001	1
16	111023881010	ROTOR	POM_WK2001	1
15	111023881009	STATOR	POM_WK2001	1
14	111023881007	FIX-DISK	POM_WK2001	1
13	R33_05X1_78X02	ORING	EPDM 70°	1
12	R1X1X03	ORING	EPDM 70°	1
11	R3X1_5X05	ORING	EPDM 70°	2
10	111023881006	SWITCH PLANTE	POM_WK2001	1
9	T13_3X0_7X01	SPRING	SUS304	1
8	111023881005	BALL JOINT SEAT	POM_WK2001	1
7	111023881004	JOINT NUT	POM_WK2001	1
6	C3X6_5X01ST	SCREW	SUS304	43
5	111023881025	V3-310 SQUARE TOP SPRAY HOUSING	ABS757	1
4	R18X3X04	ORING	EPDM 70°	1
3	999910102633	BALL JOINT	COPPER CW617N	1
2	S15_4X12LX01	FLOW RATE RESTRICORE	POM C9021	1
1	D19_2X11_2X14	WASHER	EPDM+SUS304	1

SIGN	DESCRIPTION	ZO.	VIEW	UNIT	REV
				mm	

DWG.BY	
CKD.BY	
APP.BY	
DATE	

V32KB3131EU/SM

DWG.NO.	111023880004
MATERIAL	ABS

VIGOUR